ENCLOSURES

SBE

Epoxy coated steel enclosures



Constructed from 1.2 mm thick steel and finished in RAL 7035, this unit is rated IP65 when fully sealed and comes complete with earth studs, a galvanised backplate, and a bottom gland plate; it is well suited for heavy-duty applications but is not recommended for outdoor use.

1.2 mm	RAL 7035	IP65
Steel thickness	Finish	When fully sealed

Accessories

ORDER REFERENCES

SBEB
Steel Bracket (4 Pack)

SBEC
Core Lock & Key

SBEE
Earth Strap 220 x 4mm

SBEL
Barrel Lock and Key

SBEDOC
A4 Panel Mount/Document Holder

SBEK
Spare Key

Thermostats, hygrostats, and heaters also available via the Deligo website.

SBE SERIES / TECHNICAL DATA

Dimensions & specifications

Dimensions in mm. H = height, W = width, D = depth. Quantities shown separately.

Order code	Enclosure H × W × D	Fixing holes H × W	Internal depth[1]	Gland plate	Mounting plate	Locks qty	Gland plates qty
SBE252515	250 × 250 × 150	208 × 208	138	157 × 89	200 × 200	1	1
SBE302015	300 × 200 × 150	258 × 158	138	157 × 89	250 × 150	1	1
SBE302515	300 × 250 × 150	258 × 208	138	157 × 89	250 × 200	1	1
SBE303015	300 × 300 × 150	258 × 258	138	89	218	1	1
SBE403020	400 × 300 × 200	358 × 258	188	89	218	1	1
SBE604020	600 × 400 × 200	558 × 358	188	148	346	2	1
SBE806020	800 × 600 × 200	758 × 558	188	148	446	2	1
SBE303020	300 × 300 × 200	258 × 258	188	208 × 89	250 × 250	1	1
SBE403015	400 × 300 × 150	358 × 258	138	208 × 89	350 × 250	1	1
SBE404020	400 × 400 × 200	358 × 358	188	346 × 148	350 × 350	1	1
SBE403025	400 × 300 × 250	358 × 258	238	208 × 89	350 × 250	1	1
SBE406020	400 × 600 × 200	358 × 558	188	446 × 148	350 × 550	1	1
SBE504020	500 × 400 × 200	458 × 358	188	346 × 148	450 × 350	1	1
SBE606020	600 × 600 × 200	558 × 558	188	446 × 148	550 × 550	2	1
SBE605020	600 × 500 × 200	558 × 458	188	446 × 148	550 × 450	2	1
SBE705030	700 × 500 × 300	658 × 458	288	446 × 148	650 × 450	2	1
SBE804030	800 × 400 × 300	758 × 358	288	346 × 148	750 × 350	2	1
SBE806030	800 × 600 × 300	758 × 558	288	446 × 148	750 × 550	2	1
SBE1008030	1000 × 800 × 300	958 × 758	288	446 × 148	950 × 750	2	1
SBE1208040	1200 × 800 × 400	1158 × 758	388	446 × 148	1150 × 750	2	1

[1] Internal depth measured from the mounting plate.

Technical drawing

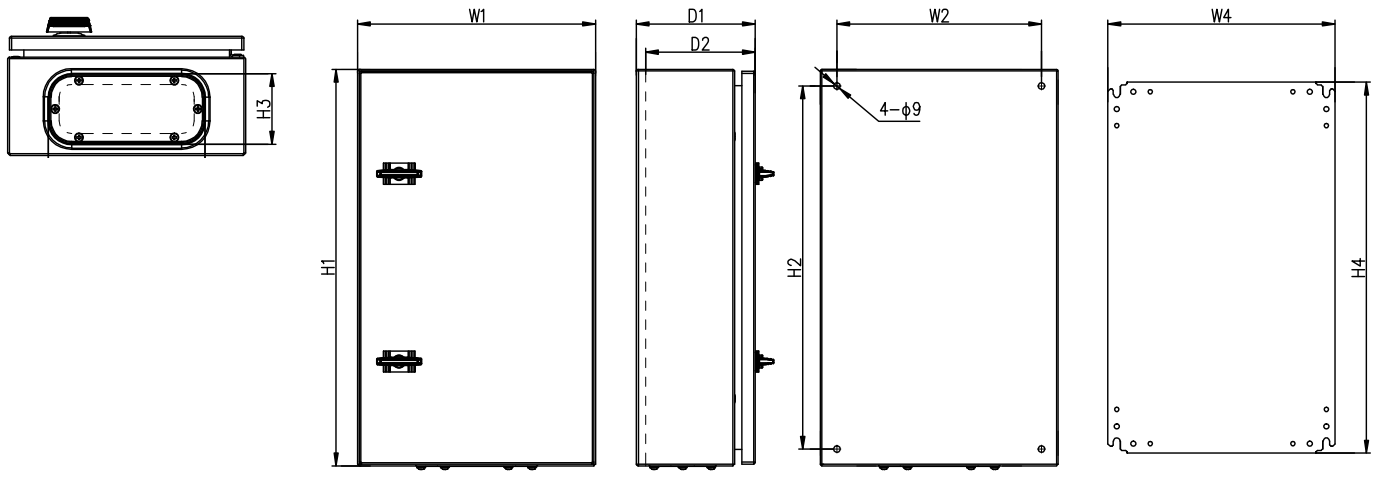

Deligo Ltd. 2026 - This document is provided to the public for information purposes only and is subjected to change without notice. Deligo Ltd make no promise of the document keeping the information contained within.